134-XS and 134-S series compressors Capacity control conversion (EA-15-03-E)

15 CAPACITY CONTROL CONVERSION: 134-S SERIES COMPRESSORS 2

15 Capacity control conversion: 134-S series compressors

For 134-S series compressors from 134-S-071 up to 134-S-220, the step and stepless configurations are changed by simply using different specially shaped plates, which suitably modify the configuration of the internal oil circuit (see chapter EA-03: "*Capacity control*", paragraphs 3.1.2 and 3.1.4).
For 134-S-240 , 134-S-270 and 134-S-300 conversion of capacity control is obtained by substitution only of the plate above which are assembled the three solenoid valves.
Below is a description of the conversion kit, including the various components, required to convert from one configuration to the other.

134-S-071 / 134-S-220

KIT FOR CONVERTING FROM THE STEP TO THE STEPLESS CONFIGURATION: COD. 303559

Components:
- Cod.: 519423 "LZ" capacity control plate;
- Cod.: 585918 "LZ" capacity control conversion diagram;
- Cod.: 592731 Solenoid valve gasket;
- Cod.: 592762 Solenoid valve gasket / capacity control plate;
- Cod.: 614566 Elastic pin d=3x8 DIN 7346 UNI 68;

KIT FOR CONVERTING FROM THE STEPLESS TO THE STEP CONFIGURATION: COD. 303558

Components:
- Cod.: 519422 "L4" capacity control plate;
- Cod.: 585918 "L4" capacity control conversion diagram;
- Cod.: 592731 Solenoid valve gasket;
- Cod.: 592762 Solenoid valve gasket / capacity control plate;
- Cod.: 614566 Elastic pin d=3x8 DIN 7346 UNI 68;

134-S-240 / 134-S-300

KIT FOR CONVERTING FROM THE STEP TO THE STEPLESS CONFIGURATION: COD. 303888

- Cod.: 592731 Screw solenoid valve gasket
- Cod.: 592832 Stepless configuration gasket

KIT FOR CONVERTING FROM THE STEPLESS TO THE STEP CONFIGURATION: COD. 303887

- Cod.: 592731 Screw solenoid valve gasket
- Cod.: 59283 Step configuration gasket

The following page shows the instructions and the assembly diagram for the various components required to replace the two plates and complete the conversion.

For what concerns the 134-XS series compressors, they are defined by a single configuration: the "L2" three steps configuration (100-75-50%) and therefore they are not subjected to any conversion.

	Warning! ✓ All the required operations to change the capacity control, must be done without pressure inside the compressor; ✓ After the configuration change, the refrigerant is charged inside the compressor by setting the compressor on vacuum; ✓ As can be seen on the following page, the two plates used have a different external profile. This means that type of capacity control applied can be identified at all times; ✓ All operations must be carried out by expert personnel.

Conversion base plate "L4-LZ"

Hole for the pin on the solenoid valve side

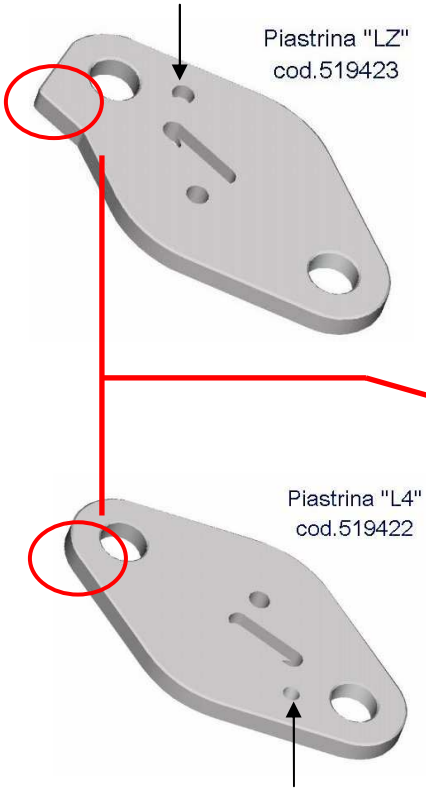

Hole for the pin on the solenoid valve side

MAIN UNLOADING COMPONENTS

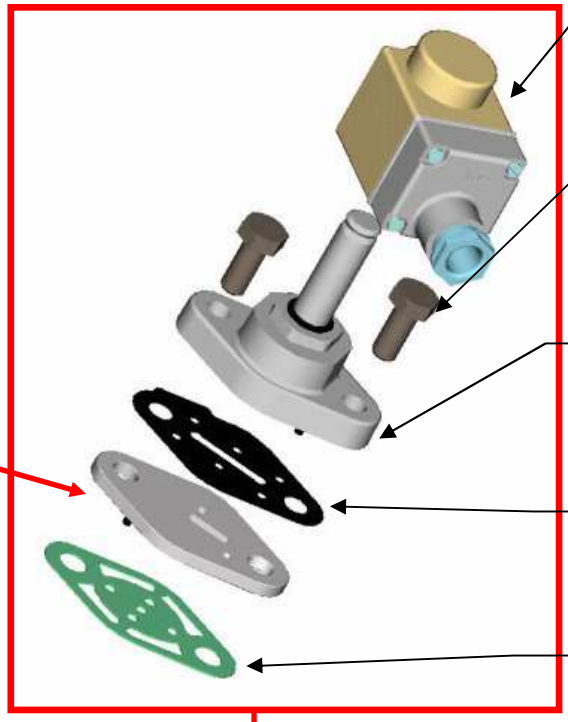

230V 50-60Hz coil; Cod. 760210.

n°2 T.E.I.F M10x35 srews; Cod.612150; C.S. 75Nm.

Solenoid valve; Cod.760450.

Metal basket; Cod.592731.

Gasket; Cod.592762.

Position of the plate: underneath the solenoid valve (16);

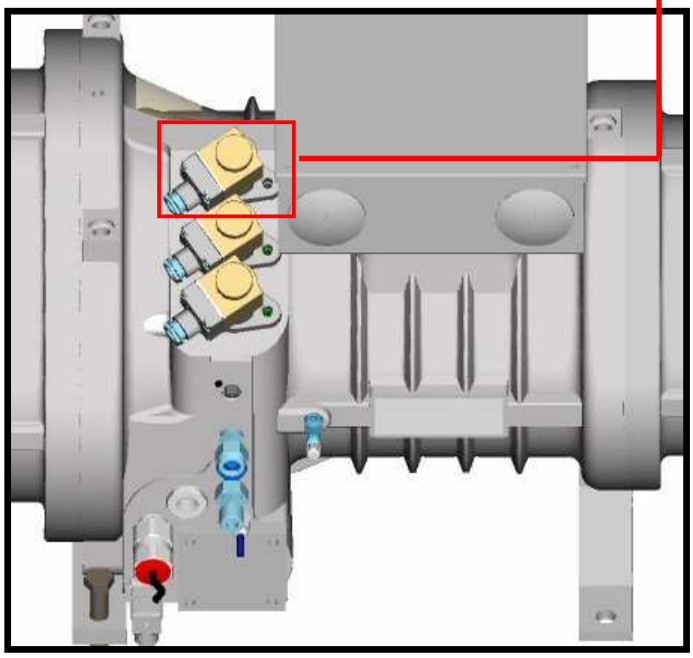

To convert the compressor from the stepped "L4" to the stepless "LZ" capacity control configuration, replace the plate, code 519422 with the plate code 519423 and vice-versa.

NB.:
Please, install the electro-valve correctly by matching the base plate pin / case hole and electro-valve pin/base plate hole

134-S-240 / 134-S-300 Models

L4 Plate

LZ Plates

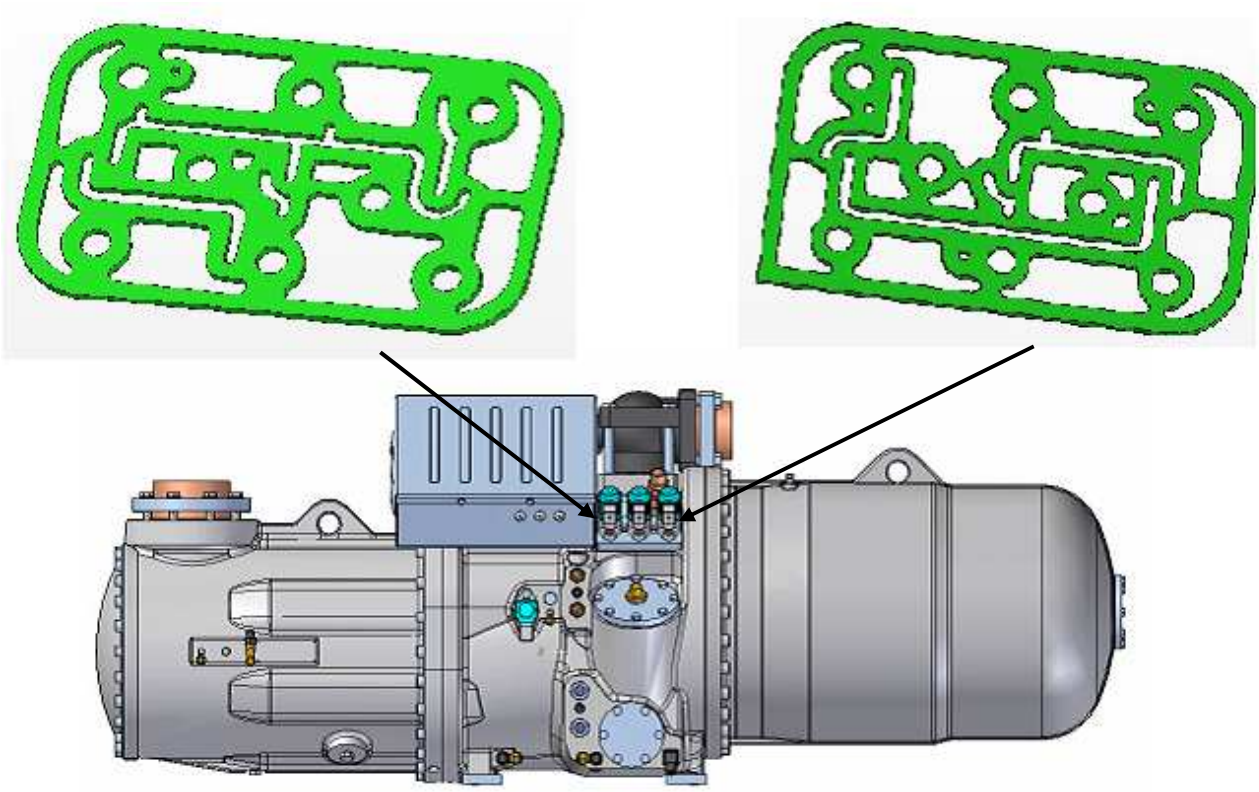

For the conversion from the step configuration "L4" to the stepless one "LZ" plate code 592833 has to be substituted with plate code 592832